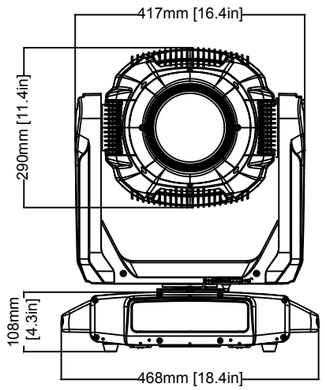

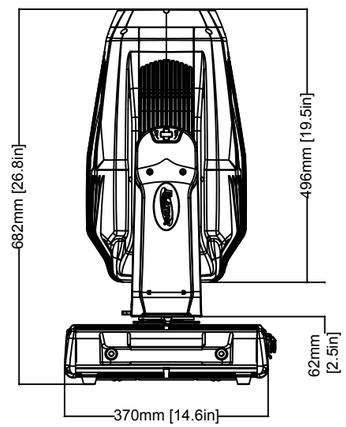

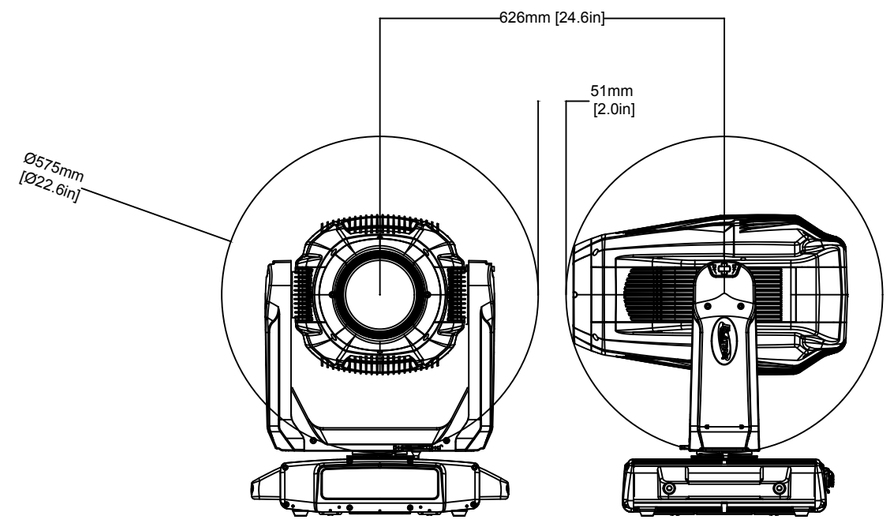

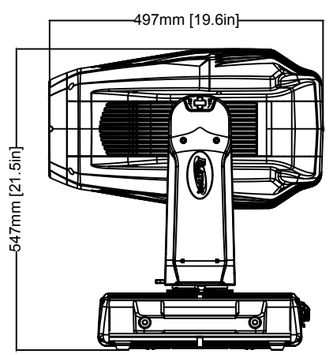

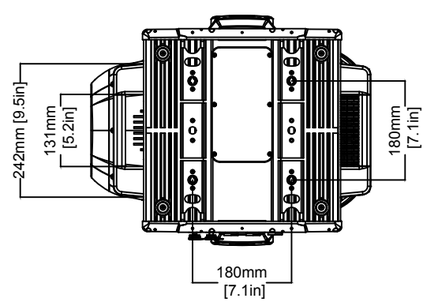

TITLE: Elation Proteus Lucius				DATE: 10-May-2023
SCALE: NONE	TOL: ±	.XX(.X) -	.XXX(.XX) -	ANGLE: -