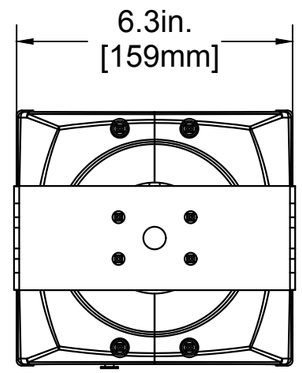


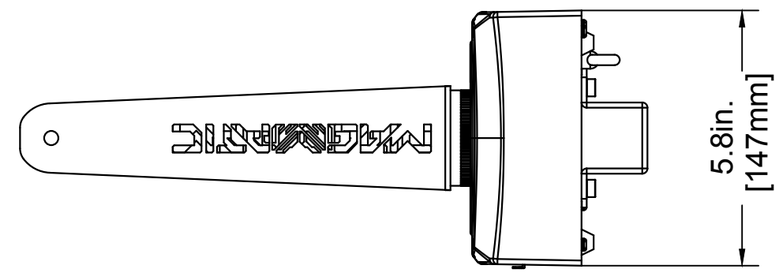


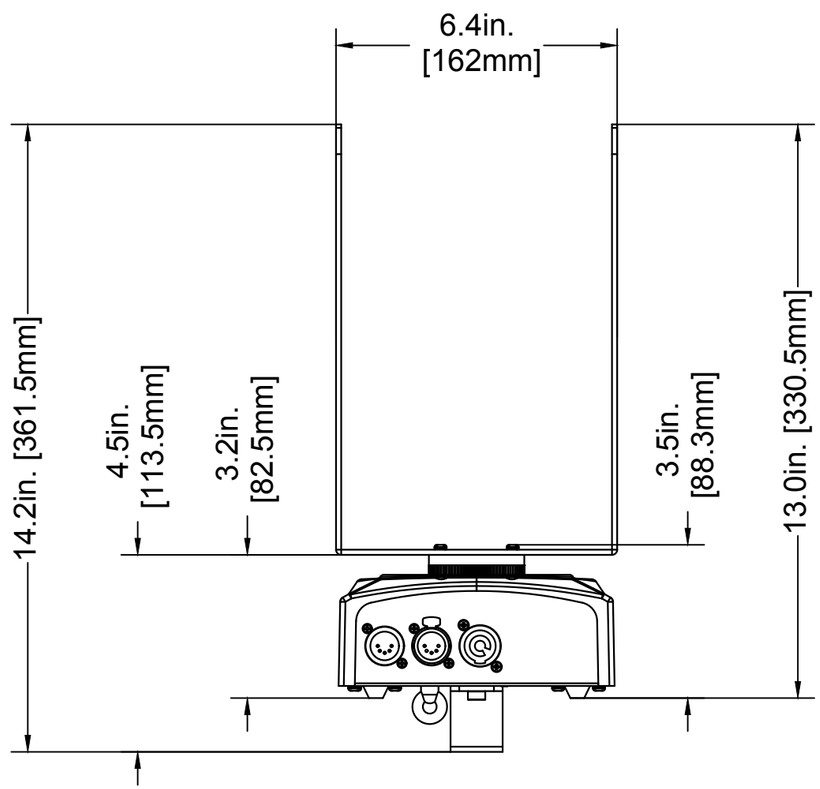


| | | | | |
|---|---|---|---|---|
| TITLE: Magmatic PM-DMX1 | | | | DATE: 04-Oct-2022 |
| SCALE: NONE | TOL: ± | .XX(.X) - | .XXX(.XX) - | ANGLE: - |